Template for RA/SE/SH with TL7 Magnetic Tubular Latch

Engineered Beautifully™

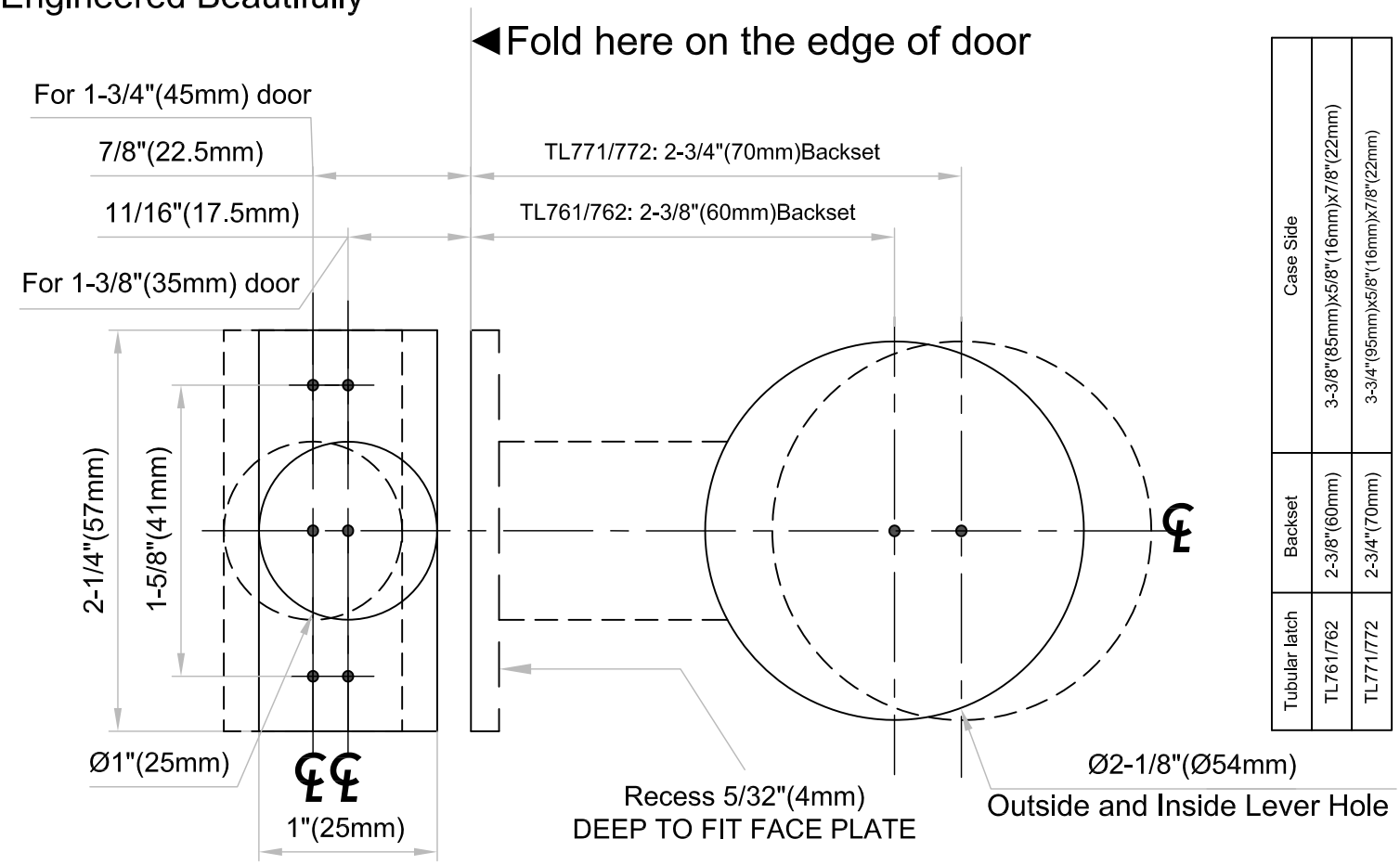

Tubular latch	Backset	Case Side
TL761/762	2-3/8"(60mm)	3-3/8"(85mm)x5/8"(16mm)x7/8"(22mm)
TL771/772	2-3/4"(70mm)	3-3/4"(95mm)x5/8"(16mm)x7/8"(22mm)

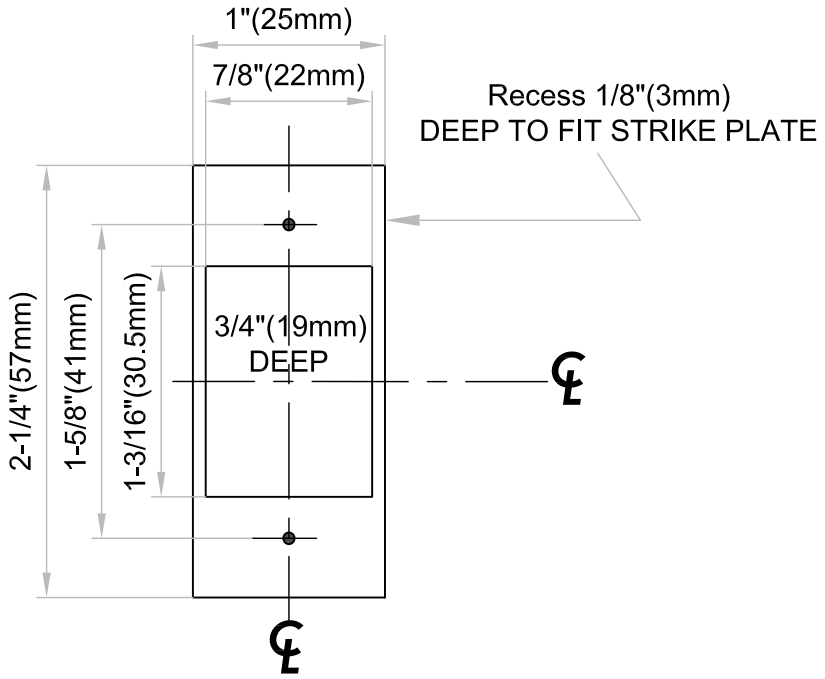

Dimensions do not provide allowances for door silencers, weather stripping, sound proofing or other additions to door or door frames.

PM-TMTL7-D54
V20230912